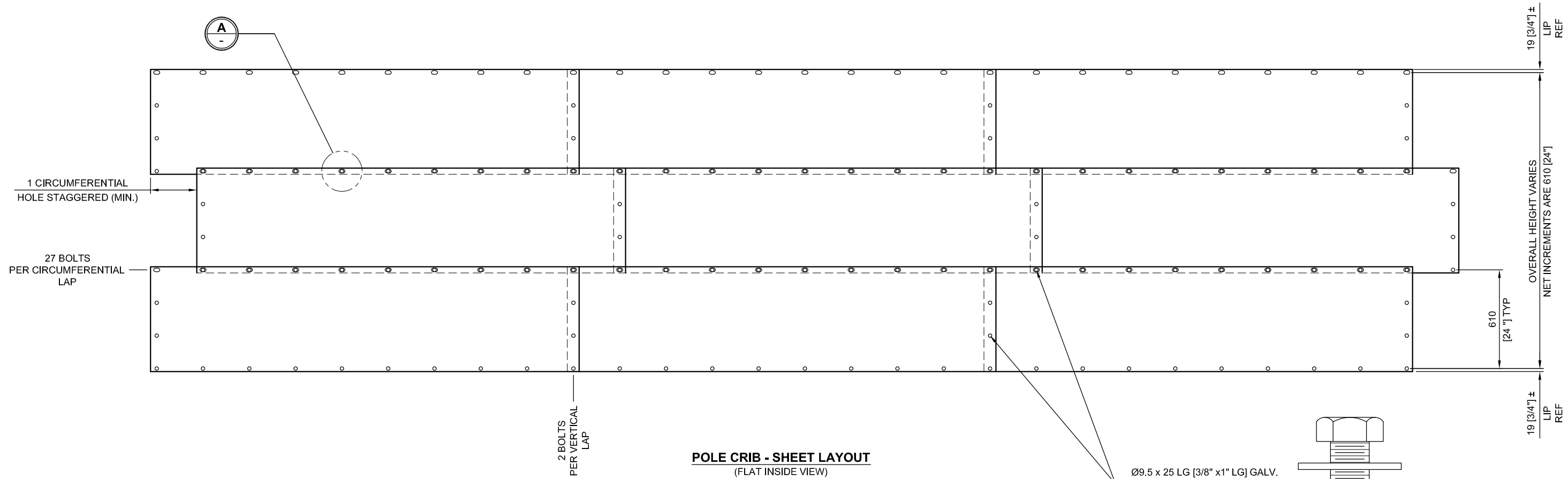

POLE CRIB - SHEET LAYOUT
(FLAT INSIDE VIEW)

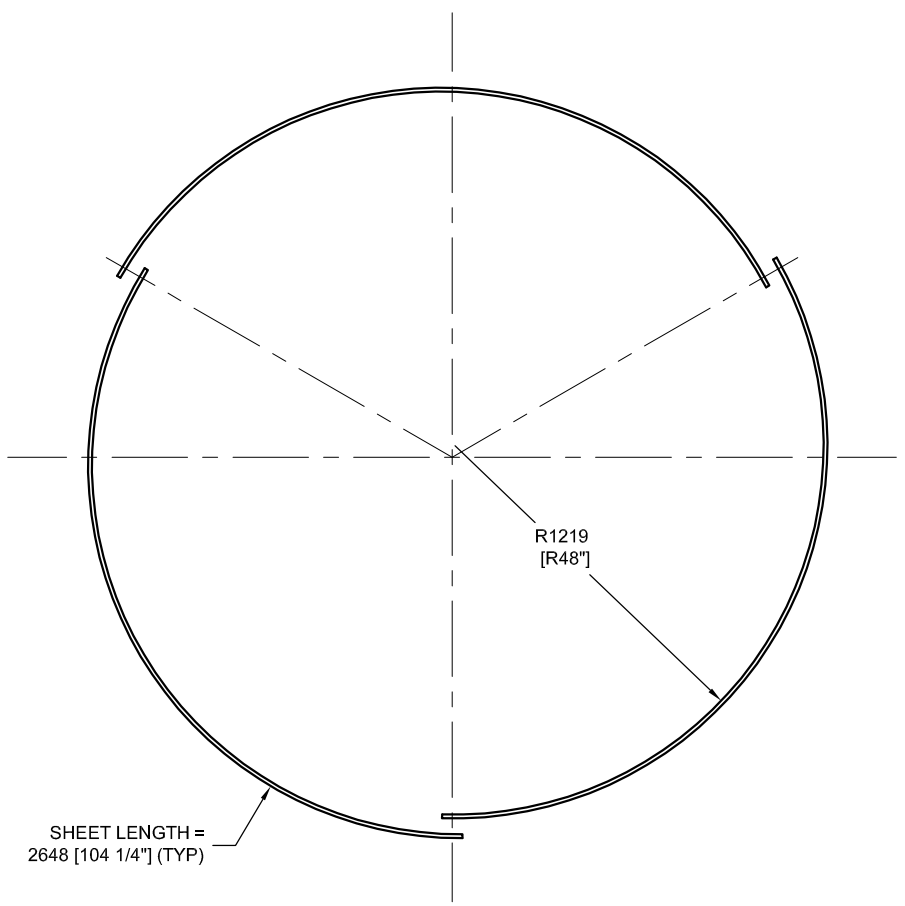

SECTION
Ø2438 [Ø96"] POLE CRIB
(3 SHEETS/RING)
INSIDE END AREA = 4.67 m² [50.27 ft²]

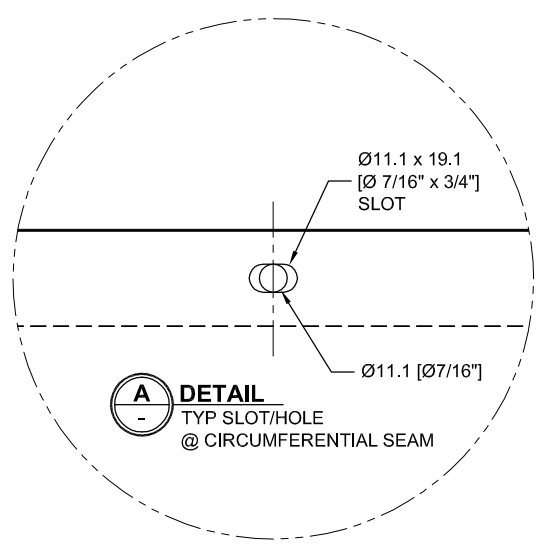

A DETAIL
TYP SLOT/HOLE
@ CIRCUMFERENTIAL SEAM

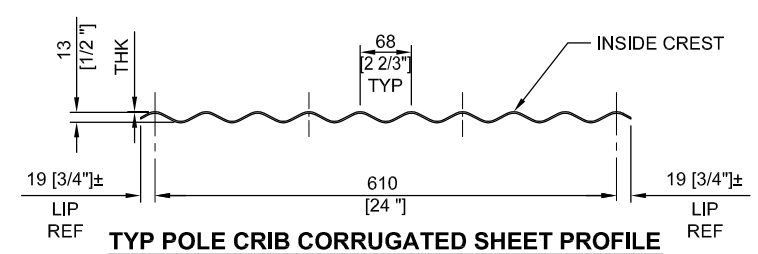

TYP POLE CRIB CORRUGATED SHEET PROFILE

THK (mm)		WT/PC	
mm	ga	kg	LBS
2.0	14	28.5	62.8

NON-STANDARD THICKNESS
AVAILABLE UPON REQUEST

NOTES:
1. ALL DIMENSIONS ARE IN MILLIMETRES UNLESS NOTED
2. CORRUGATION PROFILE 68 x 13 [2 2/3" x 1/2"]
3. * THE NET PLATE WIDTH (HEIGHT) OF 610 IS A ROUNDED CONVERSION OF 2'-0"
4. MATERIAL & COATING SPECIFICATION TO CSA G401-(CURRENT)
5. SHOP DRAWING AS PER STD-CSP-129 (CONFIDENTIAL, FOR ARMTEC INTERNAL USE ONLY)

BOLT/WASHER/NUT QUANTITY CALCULATION:
= [(27 * (NUMBER OF RINGS - 1)) + (2 * 3 * (NUMBER OF RINGS)) + 6] +
(2% OVERAGE OR 6 WHICHEVER IS GREATER)

NO.	DATE	DESCRIPTION OF REVISION	BY	CK'D	REV'D
2	2017/02/17	REVISED SHOP DETAIL TO ASSEMBLY DWG; UPDATED BORDER	LAA	TCB	RE
1	2003/03/26	REVISED SLOT/HOLE QTY, UPDATED BORDER	TCB	—	—
0	1996/02/26	ISSUED FOR STANDARD	R.E.	—	—

THIS DRAWING IS THE PROPERTY OF **ARMTEC** AND IS LENT WITHOUT CONSIDERATION OTHER THAN THE BORROWER'S AGREEMENT THAT IT SHALL NOT BE REPRODUCED, COPIED, LENT OR DISPOSED OF, DIRECTLY OR INDIRECTLY, NOR USED FOR ANY PURPOSE OTHER THAN THAT FOR WHICH IT IS SPECIFICALLY FURNISHED. THIS PRINT IS LENT SUBJECT TO RETURN ON DEMAND.

DRAINAGE ENGINEERING STANDARD ASSEMBLY DRAWING
ARMTEC CSP

SHEET LAYOUT & SECTION FOR
Ø2438 [Ø96"] ROUND CSP POLE CRIB
(3 SHEETS PER RING)

DRAWN: **R. EDWARDS**
CHECKED:
SCALE: **NTS**
BR NO. | **WT: N/A**
QTY:
YEAR **CSP** ORDER# **-20049** DWG# **E**
SHEET **1** OF **1** REV. **2**

armtec

F.E.15 REV 1 V:\GUE-Engserver\D\ACAD\STDASM\Corrugated Steel Pipe (CSP)\CURRENT\CSP-20049 Rev 2 - Ø96 inch pole crib.dwg